| SIDES | BOTTOM |
|---|---|
| 8 1/2″MOON KNOCKOUTS | 3 1/2″ KNOCKOUTS |
| 4 1/2″-3/4″ MOON KNOCKOUTS | 2 1/2″-3/4″ MOON KNOCKOUTS |
| | |
| 2 PCS 8-32×1/2 Screws Installed | |
| 2 PCS 6-20×1-3/4 Type AB screws Installed | |
| Material:Steel-0.0625″-G60 Galvanized | |

| UL File # | E508835 |
|---|---|

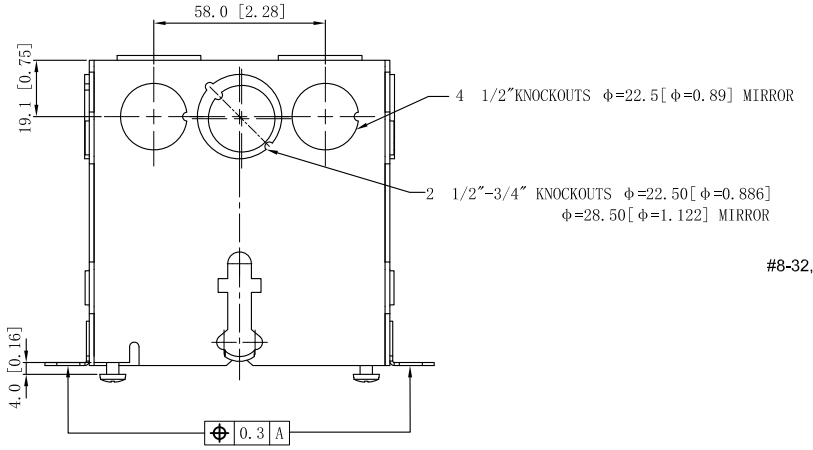


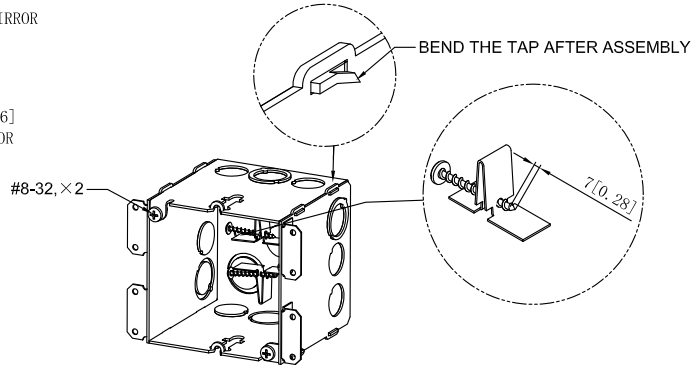


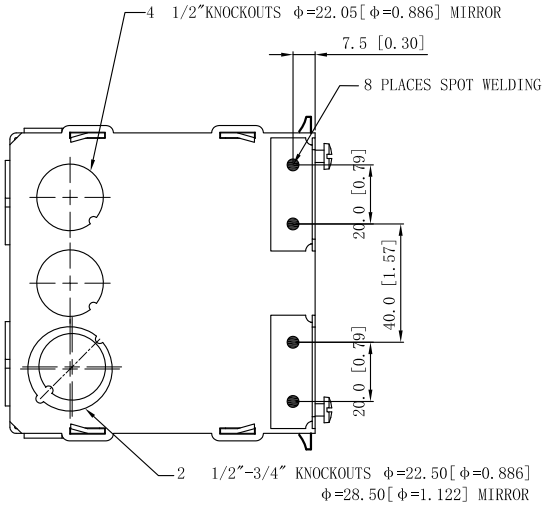


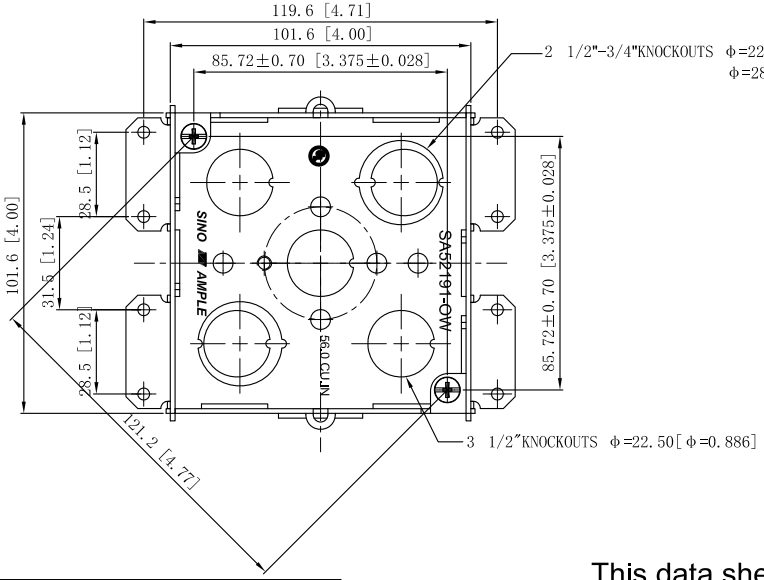


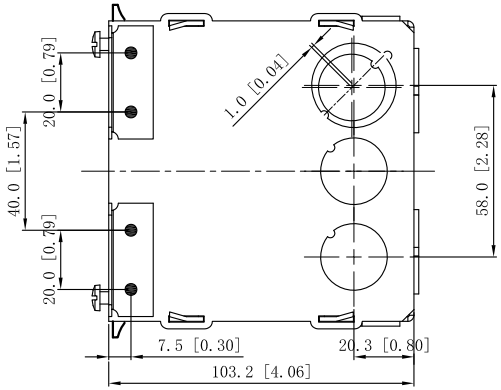


This data sheet is for reference only .SINO AMPLE reserves the right to make changes to the design without prior notice.

DESCRIPTION

TRADE REFERENCE TERMS

| STANDARD PACKING | ZHUJI SINO AMPLE METAL PRODUCTS CO.,LTD. | | |
|---|---|---|---|
| | TITLE: 4″SQUARE BOXES 4 ″ DEEP | | |
| 10 PCS | SIZE: A4 | DWG NO.: SA52191-OW | REV: A |
| | DATA SHEET | | |