SIDES	BOTTOM

Material:Steel-0.0625″-G60 Galvanized

UL File #	E508835

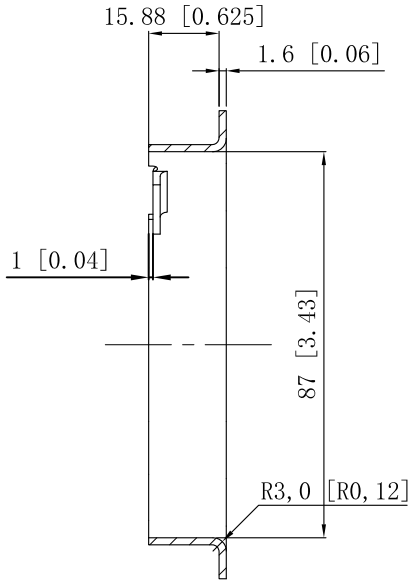

CUTAWAY VIEW A-A

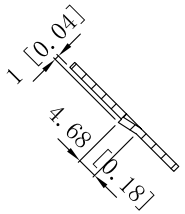

CUTAWAY VIEW E-E

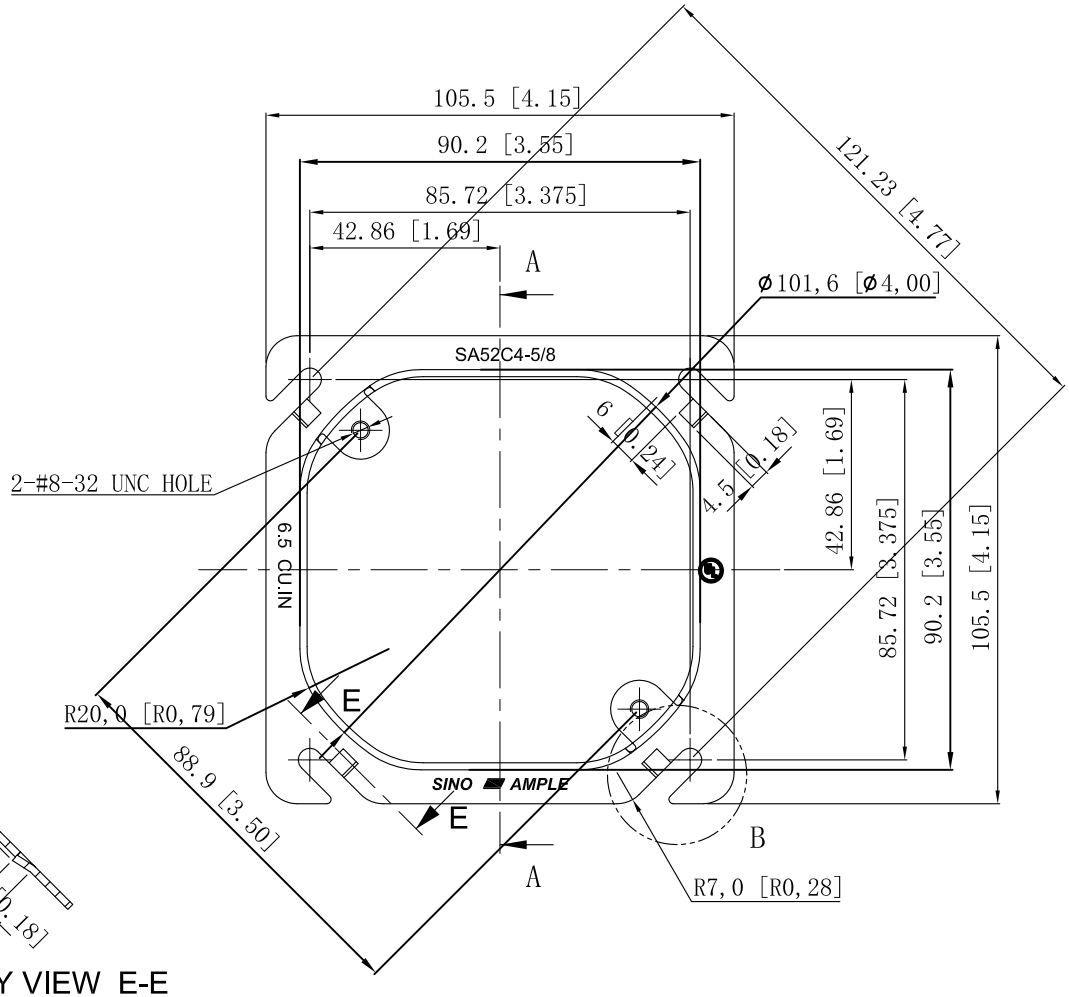

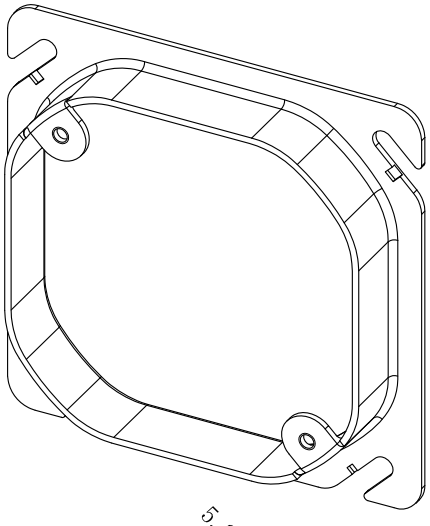

VIEW B

This data sheet is for reference only .SINO AMPLE reserves the right to make changes to the design without prior notice.

DESCRIPTION

TRADE REFERENCE TERMS

STANDARD PACKING

ZHUJI SINO AMPLE METAL PRODUCTS CO.,LTD.

TITLE

4″SQUQRE COVER-5/8″DEEP

SIZE	DWG NO.	REV
A4	SA52C4-5/8	A

DATA SHEET