SIDES	BOTTOM

Material:Steel-0.031MIN"-G60 Galvanized

UL File #	E508835

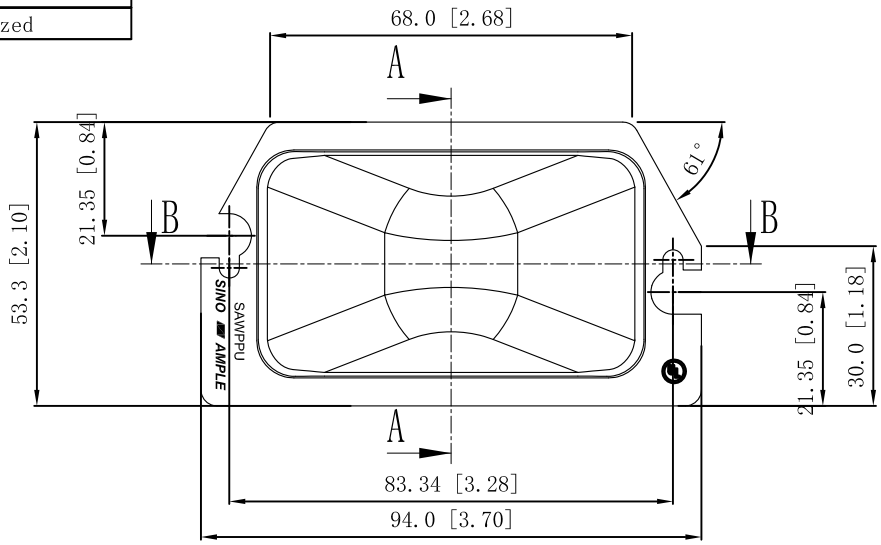

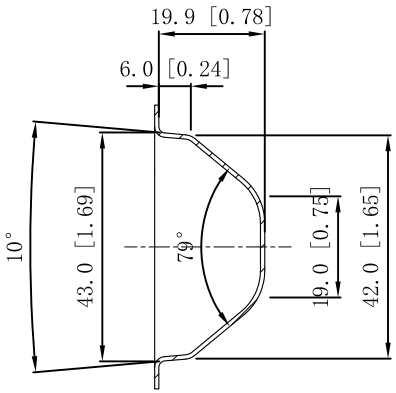

CUTAWAY VIEW A-A

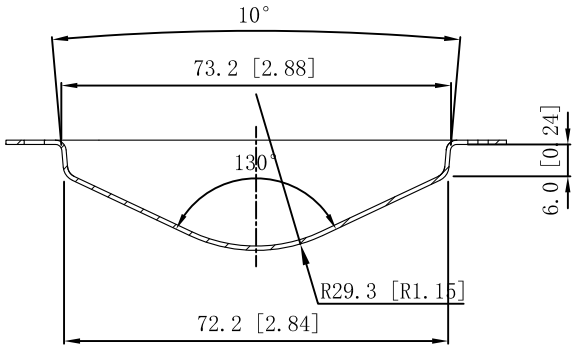

CUTAWAY VIEW B-B

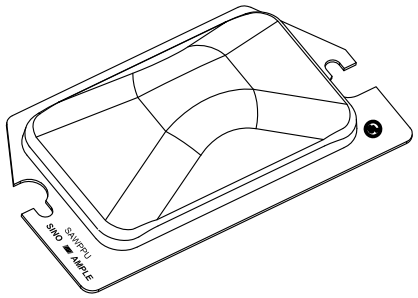

This data sheet is for reference only . SINO AMPLE reserves the right to make changes to the design without prior notice.

DESCRIPTION

TRADE REFERENCE TERMS

STANDARD PACKING

ZHUJI SINO AMPLE METAL PRODUCTS CO.,LTD.

TITLE

HANDY UTILITY BOX COVERS

SIZE	DWG NO.	REV
A4	SAWPPU	A

DATA SHEET